| Dist | COUNTY | ROUTE | POST MILES TOTAL PROJECT | SHEET No. | TOTAL SHEETS |
|---|---|---|---|---|---|
| 3 | GLE | FH7 | POST MILE TOTAL PROJECT | 1 | 15 |

GLENN COUNTY

# PUBLIC WORKS AGENCY

## PROJECT PLANS FOR CONSTRUCTION ON

# FOREST HIGHWAY 7

## GUARDRAIL REPLACEMENT PROJECT

## HSIP PROJECT # H10-03-012

TO BE SUPPLEMENTED BY STANDARD PLANS DATED 2024

### INDEX OF PLANS


| SHEET No. | DESCRIPTION |
|---|---|
| 1 | TITLE SHEET |
| 2 | TYPICAL CROSS SECTIONS |
| 3 | KEY MAP |
| 4–12 | LAYOUT |
| 13 | CONSTRUCTION DETAILS |
| 14 | CONSTRUCTION AREA SIGNS |
| 15 | SUMMARY OF QUANTITIES |


### STANDARD PLANS DATED 2024

| | |
|---|---|
| A77L2 | Midwest Guardrail System – Standard Railing Section (Steel Post with Notched Wood or Notched Recycled Plastic Block) |
| A77M1 | Midwest Guardrail System – Standard Hardware |
| A77N2 | Midwest Guardrail System – Steel Post and Block Details |
| A77N4 | Midwest Guardrail System – Typical Railing Delineation and Dike Positioning Details |
| A77P1 | Midwest Guardrail System – Typical Layouts for Embankments |
| A77P2 | Midwest Guardrail System – Typical Layouts for Embankments |
| A77P3 | Midwest Guardrail System – Typical Layouts for Embankments |
| A77T3 | Midwest Guardrail System – Buried Post End Anchor (Type B – S) |

LOCATION MAP

NO SCALE

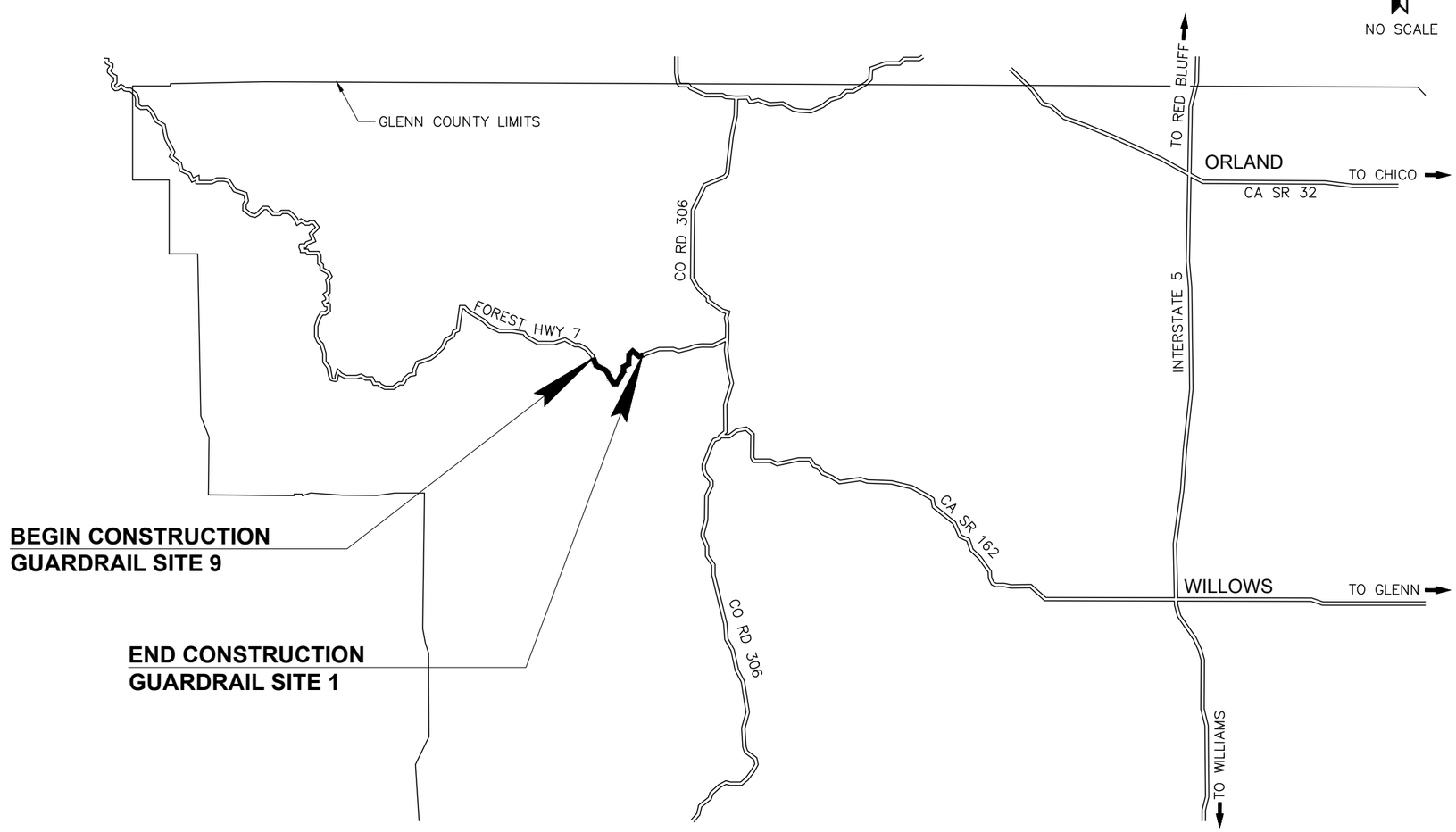


Michael A Sanchez 1/17/25
PROJECT ENGINEER REGISTERED CIVIL ENGINEER DATE

January 17, 2025
PLANS APPROVAL DATE

REGISTERED PROFESSIONAL ENGINEER
Michael Sanchez
No. 60254
Exp. 06/30/26
CIVIL
STATE OF CALIFORNIA

*THE STATE OF CALIFORNIA OR ITS OFFICERS OR AGENTS SHALL NOT BE RESPONSIBLE FOR THE ACCURACY OR COMPLETENESS OF SCANNED COPIES OF THIS PLAN SHEET.*


consor
2868 PROSPECT PARK DRIVE, SUITE 250
RANCHO CORDOVA, CA 95670
P: 916.368.9181


| | |
|---|---|
| CONTRACT No. | -- |
| PROJECT ID | HSIP # H10-03-012 |

*APPROVED AS TO IMPACT ON STATE FACILITIES AND CONFORMANCE WITH APPLICABLE STATE STANDARDS AND PRACTICES AND THAT TECHNICAL OVERSIGHT WAS PERFORMED.*

| CONSULTANT DESIGN ENGINEER | CALTRANS DESIGN OVERSIGHT APPROVAL | REGISTRATION No. | LICENSE Exp DATE | DATE SIGNED |
|---|---|---|---|---|
| Michael Sanchez | -- | -- | -- | -- |

THE CONTRACTOR SHALL POSSESS THE CLASS (OR CLASSES) OF LICENSE AS SPECIFIED IN THE "NOTICE TO BIDDERS."

TIME PLOTTED: 6:34:30 PM, Ashley Hanson
DATE PLOTTED: Friday, January 17, 2025
LAST REVISION

NOTES:

1. DIMENSIONS OF THE EXISTING CROSS SECTIONS VARY BETWEEN SITES.
2. MGS TO BE PLACED IN SAME ALIGNMENT AS EXISTING GUARDRAIL REMOVALS.
3. SEE CONSTRUCTION DETAILS FOR NEW STEEL POST SPACING.

| Dist | COUNTY | ROUTE | POST MILES TOTAL PROJECT | SHEET No. | TOTAL SHEETS |
|---|---|---|---|---|---|
| 3 | GLE | FH7 | POST MILE TOTAL PROJECT | 2 | 15 |

Michael A Sanchez 1/17/25
REGISTERED CIVIL ENGINEER DATE

January 17, 2025
PLANS APPROVAL DATE

REGISTERED PROFESSIONAL ENGINEER Michael Sanchez No. 60254 Exp. 06/30/26 CIVIL STATE OF CALIFORNIA

*THE STATE OF CALIFORNIA OR ITS OFFICERS OR AGENTS SHALL NOT BE RESPONSIBLE FOR THE ACCURACY OR COMPLETENESS OF SCANNED COPIES OF THIS PLAN SHEET.*

consor
2868 PROSPECT PARK DRIVE, SUITE 250
RANCHO CORDOVA, CA 95670
P: 916.368.9181

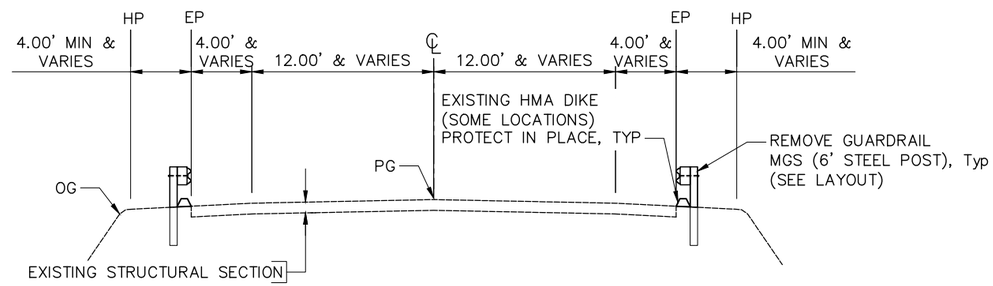


FOREST HIGHWAY 7
SITES 1–9

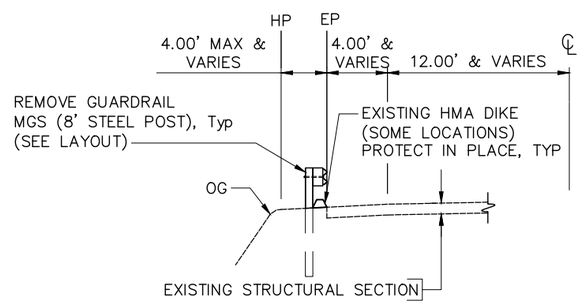


ALTERNATIVE HINGE SECTION FOR NARROW INSTALLATION
SITES 1–9

# TYPICAL CROSS SECTIONS
1" = 5'

X-1

| REVISED BY | DATE REVISED |
|---|---|
| A. Hanson | DES CHK |
| CALCULATED–DESIGNED BY | CHECKED BY |
| CONSULTANT FUNCTIONAL SUPERVISOR | Michael Sanchez |
| GLENN COUNTY – PUBLIC WORKS AGENCY | HSIP FUNDED GUARDRAIL REPAIR |

TIME PLOTTED: 6:34:36 PM, Ashley Hanson
DATE PLOTTED: Friday, January 17, 2025
LAST REVISION

| Dist | COUNTY | ROUTE | POST MILES TOTAL PROJECT | SHEET No. | TOTAL SHEETS |
|---|---|---|---|---|---|
| 3 | GLE | FH7 | POST MILE TOTAL PROJECT | 3 | 15 |

Michael A Sanchez 1/17/25
REGISTERED CIVIL ENGINEER DATE

January 17, 2025
PLANS APPROVAL DATE

REGISTERED PROFESSIONAL ENGINEER
Michael Sanchez
No. 60254
Exp. 06/30/26
CIVIL
STATE OF CALIFORNIA

*THE STATE OF CALIFORNIA OR ITS OFFICERS OR AGENTS SHALL NOT BE RESPONSIBLE FOR THE ACCURACY OR COMPLETENESS OF SCANNED COPIES OF THIS PLAN SHEET.*

consor
2868 PROSPECT PARK DRIVE, SUITE 250
RANCHO CORDOVA, CA 95670
P: 916.368.9181

KEY MAP
NO SCALE
K-1

| REVISED BY | DATE REVISED |
|---|---|
| A. Hanson | DES CHK |
| CALCULATED-DESIGNED BY | CHECKED BY |
| CONSULTANT FUNCTIONAL SUPERVISOR | Michael Sanchez |

GLENN COUNTY – PUBLIC WORKS AGENCY
HSIP FUNDED GUARDRAIL REPAIR

TIME PLOTTED: 6:35:06 PM, Ashley Hanson
DATE PLOTTED: Friday, January 17, 2025
LAST REVISION

NOTES:

1. THE EXISTING UNPAVED SHOULDER FROM EDGE OF PAVEMENT AND/OR FACE OF RAILING TO THE EXISTING HINGE POINT ACCOMMODATES THE MINIMUM WIDTH REQUIRED TO INSTALL REPLACEMENT GUARDRAIL AND TERMINAL SYSTEMS.
2. UTILITIES AND DRAINAGE HAVE NOT BEEN PLOTTED ON THE PLANS. BEFORE STARTING WORK AT EACH LOCATION, POSITIVELY LOCATE ALL CULVERTS AND UTILITIES WITHIN THE GUARDRAIL AREAS. IF CONFLICT EXISTS, IMMEDIATELY NOTIFY THE ENGINEER.
3. EXISTING OBJECT MARKERS FOR DRAINAGE AND BEG/END OF GUARDRAIL TO REMAIN IN PLACE.
4. INSTALL GUARDRAIL DELINEATORS PER STANDARD PLAN A77N4

| Dist | COUNTY | ROUTE | POST MILES TOTAL PROJECT | SHEET No. | TOTAL SHEETS |
|---|---|---|---|---|---|
| 3 | GLE | FH7 | POST MILE TOTAL PROJECT | 4 | 15 |

Michael A Sanchez 1/17/25
REGISTERED CIVIL ENGINEER DATE

January 17, 2025
PLANS APPROVAL DATE

REGISTERED PROFESSIONAL ENGINEER Michael Sanchez No. 60254 Exp. 06/30/26 CIVIL STATE OF CALIFORNIA

*THE STATE OF CALIFORNIA OR ITS OFFICERS OR AGENTS SHALL NOT BE RESPONSIBLE FOR THE ACCURACY OR COMPLETENESS OF SCANNED COPIES OF THIS PLAN SHEET.*


consor
2868 PROSPECT PARK DRIVE, SUITE 250
RANCHO CORDOVA, CA 95670
P: 916.368.9181


LEGEND:

SP STEEL POST
MGS (6' SP)
MGS (8' SP)

# LAYOUT SITE 1

1" = 20'

L-1

GLENN COUNTY – PUBLIC WORKS AGENCY

HSIP FUNDED GUARDRAIL REPAIR

CONSULTANT FUNCTIONAL SUPERVISOR: Michael Sanchez

CALCULATED–DESIGNED BY: A. Hanson

CHECKED BY: DES CHK

REVISED BY: DATE REVISED

TIME PLOTTED: 6:35:10 PM, Ashley Hanson

DATE PLOTTED: Friday, January 17, 2025

LAST REVISION

BORDER LAST REVISED 7/2/2010

USERNAME Ashley.hanson
DWG FILE S:\Client\Glenn\20-3007.05 HSIP Funded Guardrail Repair\500-Design\505 –

RELATIVE BORDER SCALE IS IN INCHES 0 1 2 3

UNIT UNIT

PROJECT NUMBER & PHASE 20-3007.05 – PROJECT PHASE

| Dist | COUNTY | ROUTE | POST MILES TOTAL PROJECT | SHEET No. | TOTAL SHEETS |
|---|---|---|---|---|---|
| 3 | GLE | FH7 | POST MILE TOTAL PROJECT | 5 | 15 |

Michael A Sanchez 1/17/25
REGISTERED CIVIL ENGINEER DATE

January 17, 2025
PLANS APPROVAL DATE

REGISTERED PROFESSIONAL ENGINEER Michael Sanchez No. 60254 Exp. 06/30/26 CIVIL STATE OF CALIFORNIA

*THE STATE OF CALIFORNIA OR ITS OFFICERS OR AGENTS SHALL NOT BE RESPONSIBLE FOR THE ACCURACY OR COMPLETENESS OF SCANNED COPIES OF THIS PLAN SHEET.*

consor
2868 PROSPECT PARK DRIVE, SUITE 250
RANCHO CORDOVA, CA 95670
P: 916.368.9181

NOTES:

1. THE EXISTING UNPAVED SHOULDER FROM EDGE OF PAVEMENT AND/OR FACE OF RAILING TO THE EXISTING HINGE POINT ACCOMMODATES THE MINIMUM WIDTH REQUIRED TO INSTALL REPLACEMENT GUARDRAIL AND TERMINAL SYSTEMS.
2. UTILITIES AND DRAINAGE HAVE NOT BEEN PLOTTED ON THE PLANS. BEFORE STARTING WORK AT EACH LOCATION, POSITIVELY LOCATE ALL CULVERTS AND UTILITIES WITHIN THE GUARDRAIL AREAS. IF CONFLICT EXISTS, IMMEDIATELY NOTIFY THE ENGINEER.
3. EXISTING OBJECT MARKERS FOR DRAINAGE AND BEG/END OF GUARDRAIL TO REMAIN IN PLACE.
4. INSTALL GUARDRAIL DELINEATORS PER STANDARD PLAN A77N4

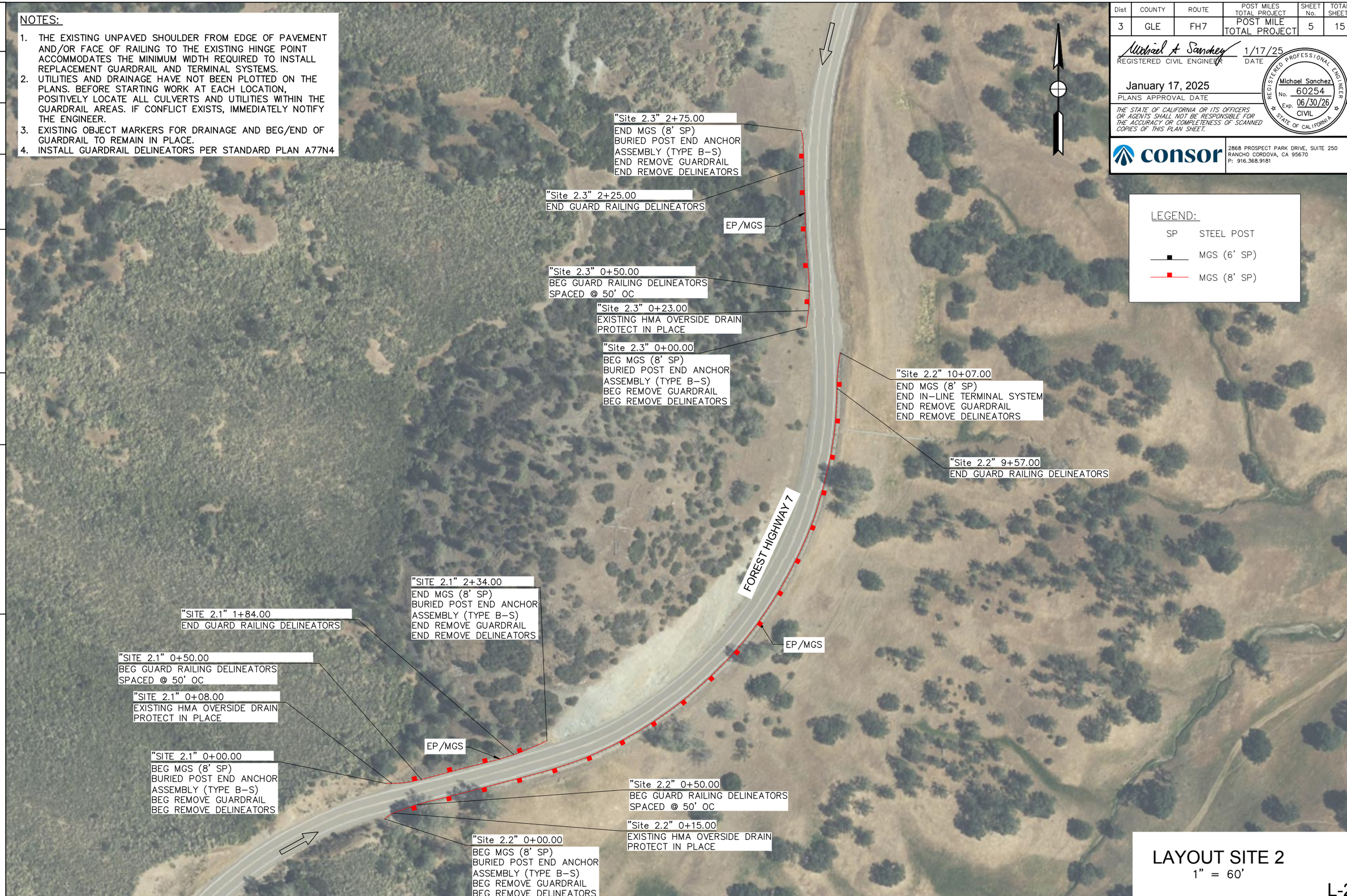


LEGEND:

| | |
|---|---|
| SP | STEEL POST |
| | MGS (6' SP) |
| | MGS (8' SP) |

LAYOUT SITE 2
1" = 60'

L-2

GLENN COUNTY – PUBLIC WORKS AGENCY
HSIP FUNDED GUARDRAIL REPAIR

CONSULTANT FUNCTIONAL SUPERVISOR: Michael Sanchez
CALCULATED–DESIGNED BY / CHECKED BY
DES CHK: A. Hanson
REVISED BY / DATE REVISED

TIME PLOTTED: 6:35:14 PM, Ashley Hanson
DATE PLOTTED: Friday, January 17, 2025
LAST REVISION

| Dist | COUNTY | ROUTE | POST MILES TOTAL PROJECT | SHEET No. | TOTAL SHEETS |
|---|---|---|---|---|---|
| 3 | GLE | FH7 | POST MILE TOTAL PROJECT | 6 | 15 |

Michael A Sanchez 1/17/25
REGISTERED CIVIL ENGINEER DATE

January 17, 2025
PLANS APPROVAL DATE

REGISTERED PROFESSIONAL ENGINEER Michael Sanchez No. 60254 Exp. 06/30/26 CIVIL STATE OF CALIFORNIA

*THE STATE OF CALIFORNIA OR ITS OFFICERS OR AGENTS SHALL NOT BE RESPONSIBLE FOR THE ACCURACY OR COMPLETENESS OF SCANNED COPIES OF THIS PLAN SHEET.*

consor
2868 PROSPECT PARK DRIVE, SUITE 250
RANCHO CORDOVA, CA 95670
P: 916.368.9181

NOTES:

1. THE EXISTING UNPAVED SHOULDER FROM EDGE OF PAVEMENT AND/OR FACE OF RAILING TO THE EXISTING HINGE POINT ACCOMMODATES THE MINIMUM WIDTH REQUIRED TO INSTALL REPLACEMENT GUARDRAIL AND TERMINAL SYSTEMS.
2. UTILITIES AND DRAINAGE HAVE NOT BEEN PLOTTED ON THE PLANS. BEFORE STARTING WORK AT EACH LOCATION, POSITIVELY LOCATE ALL CULVERTS AND UTILITIES WITHIN THE GUARDRAIL AREAS. IF CONFLICT EXISTS, IMMEDIATELY NOTIFY THE ENGINEER.
3. EXISTING OBJECT MARKERS FOR DRAINAGE AND BEG/END OF GUARDRAIL TO REMAIN IN PLACE.
4. INSTALL GUARDRAIL DELINEATORS PER STANDARD PLAN A77N4

LEGEND:

| | |
|---|---|
| SP | STEEL POST |
| ■ | MGS (6' SP) |
| ■ | MGS (8' SP) |

LAYOUT SITE 3
1" = 20'

L-3

GLENN COUNTY – PUBLIC WORKS AGENCY
HSIP FUNDED GUARDRAIL REPAIR

CONSULTANT FUNCTIONAL SUPERVISOR: Michael Sanchez
CALCULATED–DESIGNED BY: A. Hanson
CHECKED BY:
DES CHK
REVISED BY
DATE REVISED

TIME PLOTTED: 6:35:19 PM, Ashley Hanson
DATE PLOTTED: Friday, January 17, 2025
LAST REVISION

BORDER LAST REVISED 7/2/2010
USERNAME Ashley.hanson
DWG FILE S:\Client\Glenn\20-3007.05 HSIP Funded Guardrail Repair\500-Design\505 –
RELATIVE BORDER SCALE IS IN INCHES 0 1 2 3
UNIT UNIT
PROJECT NUMBER & PHASE 20-3007.05 – PROJECT PHASE

NOTES:

1. THE EXISTING UNPAVED SHOULDER FROM EDGE OF PAVEMENT AND/OR FACE OF RAILING TO THE EXISTING HINGE POINT ACCOMMODATES THE MINIMUM WIDTH REQUIRED TO INSTALL REPLACEMENT GUARDRAIL AND TERMINAL SYSTEMS.
2. UTILITIES AND DRAINAGE HAVE NOT BEEN PLOTTED ON THE PLANS. BEFORE STARTING WORK AT EACH LOCATION, POSITIVELY LOCATE ALL CULVERTS AND UTILITIES WITHIN THE GUARDRAIL AREAS. IF CONFLICT EXISTS, IMMEDIATELY NOTIFY THE ENGINEER.
3. EXISTING OBJECT MARKERS FOR DRAINAGE AND BEG/END OF GUARDRAIL TO REMAIN IN PLACE.
4. INSTALL GUARDRAIL DELINEATORS PER STANDARD PLAN A77N4

| Dist | COUNTY | ROUTE | POST MILES TOTAL PROJECT | SHEET No. | TOTAL SHEETS |
|---|---|---|---|---|---|
| 3 | GLE | FH7 | POST MILE TOTAL PROJECT | 7 | 15 |

Michael A Sanchez 1/17/25
REGISTERED CIVIL ENGINEER DATE

January 17, 2025
PLANS APPROVAL DATE

REGISTERED PROFESSIONAL ENGINEER
Michael Sanchez
No. 60254
Exp. 06/30/26
CIVIL
STATE OF CALIFORNIA

*THE STATE OF CALIFORNIA OR ITS OFFICERS OR AGENTS SHALL NOT BE RESPONSIBLE FOR THE ACCURACY OR COMPLETENESS OF SCANNED COPIES OF THIS PLAN SHEET.*


consor
2868 PROSPECT PARK DRIVE, SUITE 250
RANCHO CORDOVA, CA 95670
P: 916.368.9181


LEGEND:

| | |
|---|---|
| SP | STEEL POST |
| | MGS (6' SP) |
| | MGS (8' SP) |

# LAYOUT SITE 4

1" = 20'

L-4

| REVISED BY | DATE REVISED |
|---|---|
| A. Hanson | |

| CALCULATED-DESIGNED BY | CHECKED BY |
|---|---|
| | |

CONSULTANT FUNCTIONAL SUPERVISOR: Michael Sanchez

GLENN COUNTY – PUBLIC WORKS AGENCY

HSIP FUNDED GUARDRAIL REPAIR

TIME PLOTTED: 6:35:23 PM, Ashley Hanson

DATE PLOTTED: Friday, January 17, 2025

LAST REVISION

BORDER LAST REVISED 7/2/2010

USERNAME Ashley.hanson
DWG FILE S:\Client\Glenn\20-3007.05 HSIP Funded Guardrail Repair\500-Design\505 –

RELATIVE BORDER SCALE IS IN INCHES 0 1 2 3

UNIT UNIT

PROJECT NUMBER & PHASE 20-3007.05 – PROJECT PHASE

| Dist | COUNTY | ROUTE | POST MILES TOTAL PROJECT | SHEET No. | TOTAL SHEETS |
|---|---|---|---|---|---|
| 3 | GLE | FH7 | POST MILE TOTAL PROJECT | 8 | 15 |

Michael A Sanchez 1/17/25
REGISTERED CIVIL ENGINEER DATE

January 17, 2025
PLANS APPROVAL DATE

REGISTERED PROFESSIONAL ENGINEER Michael Sanchez No. 60254 Exp. 06/30/26 CIVIL STATE OF CALIFORNIA

*THE STATE OF CALIFORNIA OR ITS OFFICERS OR AGENTS SHALL NOT BE RESPONSIBLE FOR THE ACCURACY OR COMPLETENESS OF SCANNED COPIES OF THIS PLAN SHEET.*

consor
2868 PROSPECT PARK DRIVE, SUITE 250
RANCHO CORDOVA, CA 95670
P: 916.368.9181

NOTES:

1. THE EXISTING UNPAVED SHOULDER FROM EDGE OF PAVEMENT AND/OR FACE OF RAILING TO THE EXISTING HINGE POINT ACCOMMODATES THE MINIMUM WIDTH REQUIRED TO INSTALL REPLACEMENT GUARDRAIL AND TERMINAL SYSTEMS.
2. UTILITIES AND DRAINAGE HAVE NOT BEEN PLOTTED ON THE PLANS. BEFORE STARTING WORK AT EACH LOCATION, POSITIVELY LOCATE ALL CULVERTS AND UTILITIES WITHIN THE GUARDRAIL AREAS. IF CONFLICT EXISTS, IMMEDIATELY NOTIFY THE ENGINEER.
3. EXISTING OBJECT MARKERS FOR DRAINAGE AND BEG/END OF GUARDRAIL TO REMAIN IN PLACE.
4. INSTALL GUARDRAIL DELINEATORS PER STANDARD PLAN A77N4

LEGEND:

SP STEEL POST
MGS (6' SP)
MGS (8' SP)

LAYOUT SITE 5
1" = 80'

L-5

| REVISED BY | DATE REVISED |
|---|---|
| A. Hanson | DES CHK |
| CALCULATED-DESIGNED BY | CHECKED BY |
| CONSULTANT FUNCTIONAL SUPERVISOR | Michael Sanchez |

GLENN COUNTY – PUBLIC WORKS AGENCY
HSIP FUNDED GUARDRAIL REPAIR

TIME PLOTTED: 6:35:27 PM, Ashley Hanson
DATE PLOTTED: Friday, January 17, 2025
LAST REVISION

| Dist | COUNTY | ROUTE | POST MILES TOTAL PROJECT | SHEET No. | TOTAL SHEETS |
|---|---|---|---|---|---|
| 3 | GLE | FH7 | POST MILE TOTAL PROJECT | 9 | 15 |

Michael A Sanchez 1/17/25
REGISTERED CIVIL ENGINEER DATE

January 17, 2025
PLANS APPROVAL DATE

REGISTERED PROFESSIONAL ENGINEER
Michael Sanchez
No. 60254
Exp. 06/30/26
CIVIL
STATE OF CALIFORNIA

*THE STATE OF CALIFORNIA OR ITS OFFICERS OR AGENTS SHALL NOT BE RESPONSIBLE FOR THE ACCURACY OR COMPLETENESS OF SCANNED COPIES OF THIS PLAN SHEET.*

consor
2868 PROSPECT PARK DRIVE, SUITE 250
RANCHO CORDOVA, CA 95670
P: 916.368.9181

NOTES:

1. THE EXISTING UNPAVED SHOULDER FROM EDGE OF PAVEMENT AND/OR FACE OF RAILING TO THE EXISTING HINGE POINT ACCOMMODATES THE MINIMUM WIDTH REQUIRED TO INSTALL REPLACEMENT GUARDRAIL AND TERMINAL SYSTEMS.
2. UTILITIES AND DRAINAGE HAVE NOT BEEN PLOTTED ON THE PLANS. BEFORE STARTING WORK AT EACH LOCATION, POSITIVELY LOCATE ALL CULVERTS AND UTILITIES WITHIN THE GUARDRAIL AREAS. IF CONFLICT EXISTS, IMMEDIATELY NOTIFY THE ENGINEER.
3. EXISTING OBJECT MARKERS FOR DRAINAGE AND BEG/END OF GUARDRAIL TO REMAIN IN PLACE.
4. INSTALL GUARDRAIL DELINEATORS PER STANDARD PLAN A77N4

LEGEND:

SP STEEL POST
MGS (6' SP)
MGS (8' SP)

# LAYOUT SITE 6

1" = 20'

L-6

GLENN COUNTY – PUBLIC WORKS AGENCY

HSIP FUNDED GUARDRAIL REPAIR

CONSULTANT FUNCTIONAL SUPERVISOR: Michael Sanchez

CALCULATED–DESIGNED BY: A. Hanson

CHECKED BY

DES CHK

REVISED BY

DATE REVISED

LAST REVISION

DATE PLOTTED: Friday, January 17, 2025

TIME PLOTTED: 6:35:30 PM, Ashley Hanson

| Dist | COUNTY | ROUTE | POST MILES TOTAL PROJECT | SHEET No. | TOTAL SHEETS |
|---|---|---|---|---|---|
| 3 | GLE | FH7 | POST MILE TOTAL PROJECT | 10 | 15 |

Michael A Sanchez 1/17/25
REGISTERED CIVIL ENGINEER DATE

January 17, 2025
PLANS APPROVAL DATE

REGISTERED PROFESSIONAL ENGINEER
Michael Sanchez
No. 60254
Exp. 06/30/26
CIVIL
STATE OF CALIFORNIA

*THE STATE OF CALIFORNIA OR ITS OFFICERS OR AGENTS SHALL NOT BE RESPONSIBLE FOR THE ACCURACY OR COMPLETENESS OF SCANNED COPIES OF THIS PLAN SHEET.*

consor
2868 PROSPECT PARK DRIVE, SUITE 250
RANCHO CORDOVA, CA 95670
P: 916.368.9181

NOTES:

1. THE EXISTING UNPAVED SHOULDER FROM EDGE OF PAVEMENT AND/OR FACE OF RAILING TO THE EXISTING HINGE POINT ACCOMMODATES THE MINIMUM WIDTH REQUIRED TO INSTALL REPLACEMENT GUARDRAIL AND TERMINAL SYSTEMS.
2. UTILITIES AND DRAINAGE HAVE NOT BEEN PLOTTED ON THE PLANS. BEFORE STARTING WORK AT EACH LOCATION, POSITIVELY LOCATE ALL CULVERTS AND UTILITIES WITHIN THE GUARDRAIL AREAS. IF CONFLICT EXISTS, IMMEDIATELY NOTIFY THE ENGINEER.
3. EXISTING OBJECT MARKERS FOR DRAINAGE AND BEG/END OF GUARDRAIL TO REMAIN IN PLACE.
4. INSTALL GUARDRAIL DELINEATORS PER STANDARD PLAN A77N4

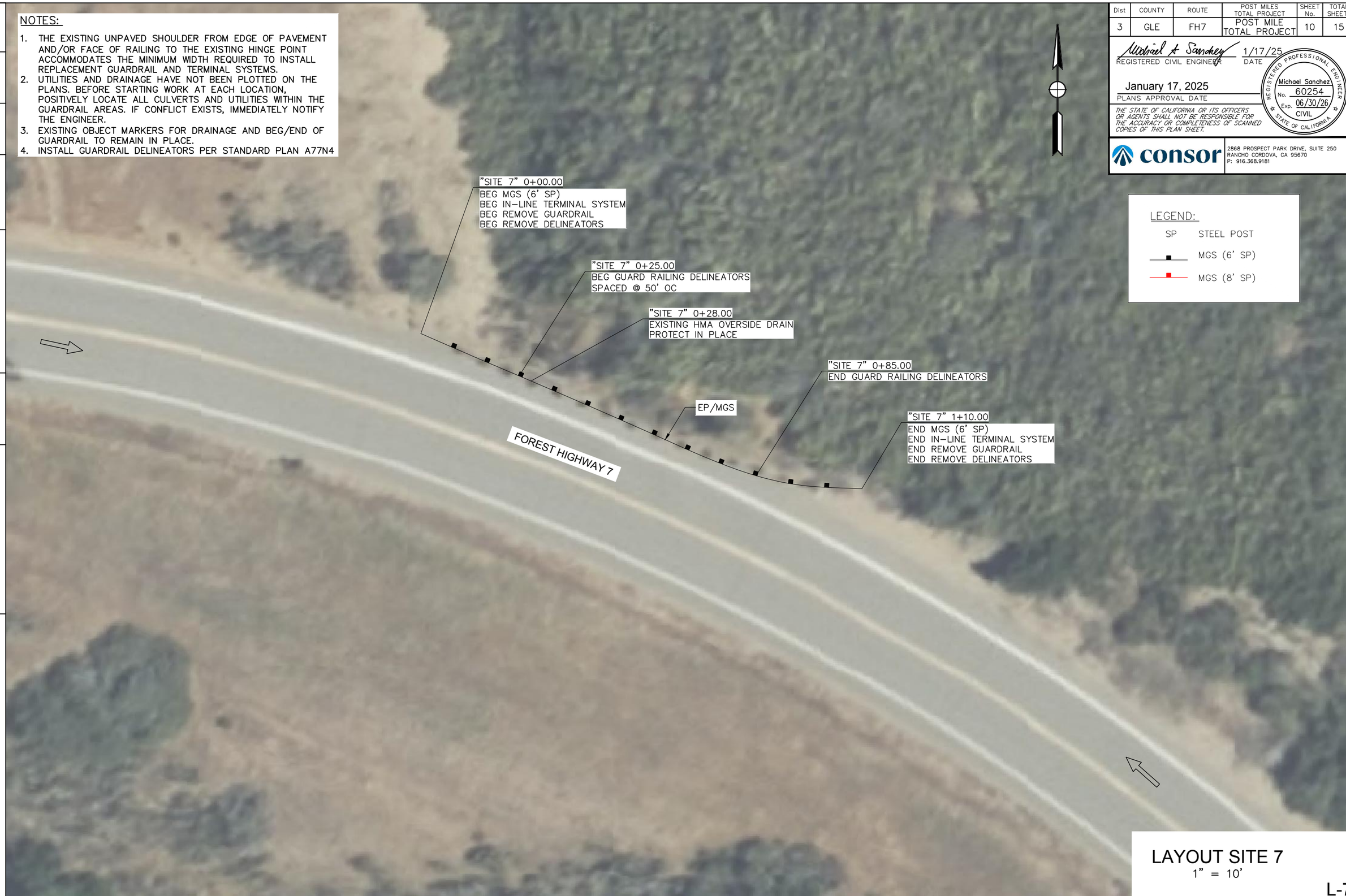


LEGEND:

| | |
|---|---|
| SP | STEEL POST |
| | MGS (6' SP) |
| | MGS (8' SP) |

LAYOUT SITE 7
1" = 10'
L-7

GLENN COUNTY – PUBLIC WORKS AGENCY
HSIP FUNDED GUARDRAIL REPAIR

CONSULTANT FUNCTIONAL SUPERVISOR: Michael Sanchez
CALCULATED–DESIGNED BY: A. Hanson
CHECKED BY: DES CHK
REVISED BY: DATE REVISED

TIME PLOTTED: 6:35:34 PM, Ashley Hanson
DATE PLOTTED: Friday, January 17, 2025
LAST REVISION

BORDER LAST REVISED 7/2/2010
USERNAME Ashley.hanson
DWG FILE S:\Client\Glenn\20–3007.05 HSIP Funded Guardrail Repair\500–Design\505 –
RELATIVE BORDER SCALE IS IN INCHES 0 1 2 3
UNIT UNIT
PROJECT NUMBER & PHASE 20–3007.05 – PROJECT PHASE

| Dist | COUNTY | ROUTE | POST MILES TOTAL PROJECT | SHEET No. | TOTAL SHEETS |
|---|---|---|---|---|---|
| 3 | GLE | FH7 | POST MILE TOTAL PROJECT | 11 | 15 |

Michael A Sanchez 1/17/25
REGISTERED CIVIL ENGINEER DATE

January 17, 2025
PLANS APPROVAL DATE

REGISTERED PROFESSIONAL ENGINEER
Michael Sanchez
No. 60254
Exp. 06/30/26
CIVIL
STATE OF CALIFORNIA

*THE STATE OF CALIFORNIA OR ITS OFFICERS OR AGENTS SHALL NOT BE RESPONSIBLE FOR THE ACCURACY OR COMPLETENESS OF SCANNED COPIES OF THIS PLAN SHEET.*

consor
2868 PROSPECT PARK DRIVE, SUITE 250
RANCHO CORDOVA, CA 95670
P: 916.368.9181

NOTES:

1. THE EXISTING UNPAVED SHOULDER FROM EDGE OF PAVEMENT AND/OR FACE OF RAILING TO THE EXISTING HINGE POINT ACCOMMODATES THE MINIMUM WIDTH REQUIRED TO INSTALL REPLACEMENT GUARDRAIL AND TERMINAL SYSTEMS.
2. UTILITIES AND DRAINAGE HAVE NOT BEEN PLOTTED ON THE PLANS. BEFORE STARTING WORK AT EACH LOCATION, POSITIVELY LOCATE ALL CULVERTS AND UTILITIES WITHIN THE GUARDRAIL AREAS. IF CONFLICT EXISTS, IMMEDIATELY NOTIFY THE ENGINEER.
3. EXISTING OBJECT MARKERS FOR DRAINAGE AND BEG/END OF GUARDRAIL TO REMAIN IN PLACE.
4. INSTALL GUARDRAIL DELINEATORS PER STANDARD PLAN A77N4

LEGEND:

SP STEEL POST
MGS (6' SP)
MGS (8' SP)

# LAYOUT SITE 8

1" = 20'

L-8

GLENN COUNTY – PUBLIC WORKS AGENCY

HSIP FUNDED GUARDRAIL REPAIR

CONSULTANT FUNCTIONAL SUPERVISOR: Michael Sanchez

CALCULATED–DESIGNED BY: A. Hanson

CHECKED BY

DES CHK

REVISED BY

DATE REVISED

TIME PLOTTED: 6:35:38 PM, Ashley Hanson

DATE PLOTTED: Friday, January 17, 2025

LAST REVISION

BORDER LAST REVISED 7/2/2010

USERNAME Ashley.hanson
DWG FILE S:\Client\Glenn\20-3007.05 HSIP Funded Guardrail Repair\500-Design\505 –

RELATIVE BORDER SCALE IS IN INCHES 0 1 2 3

UNIT UNIT

PROJECT NUMBER & PHASE 20-3007.05 – PROJECT PHASE

| Dist | COUNTY | ROUTE | POST MILES TOTAL PROJECT | SHEET No. | TOTAL SHEETS |
|---|---|---|---|---|---|
| 3 | GLE | FH7 | POST MILE TOTAL PROJECT | 12 | 15 |

Michael A Sanchez 1/17/25
REGISTERED CIVIL ENGINEER DATE

January 17, 2025
PLANS APPROVAL DATE

REGISTERED PROFESSIONAL ENGINEER
Michael Sanchez
No. 60254
Exp. 06/30/26
CIVIL
STATE OF CALIFORNIA

*THE STATE OF CALIFORNIA OR ITS OFFICERS OR AGENTS SHALL NOT BE RESPONSIBLE FOR THE ACCURACY OR COMPLETENESS OF SCANNED COPIES OF THIS PLAN SHEET.*

consor
2868 PROSPECT PARK DRIVE, SUITE 250
RANCHO CORDOVA, CA 95670
P: 916.368.9181

NOTES:

1. THE EXISTING UNPAVED SHOULDER FROM EDGE OF PAVEMENT AND/OR FACE OF RAILING TO THE EXISTING HINGE POINT ACCOMMODATES THE MINIMUM WIDTH REQUIRED TO INSTALL REPLACEMENT GUARDRAIL AND TERMINAL SYSTEMS.
2. UTILITIES AND DRAINAGE HAVE NOT BEEN PLOTTED ON THE PLANS. BEFORE STARTING WORK AT EACH LOCATION, POSITIVELY LOCATE ALL CULVERTS AND UTILITIES WITHIN THE GUARDRAIL AREAS. IF CONFLICT EXISTS, IMMEDIATELY NOTIFY THE ENGINEER.
3. EXISTING OBJECT MARKERS FOR DRAINAGE AND BEG/END OF GUARDRAIL TO REMAIN IN PLACE.
4. INSTALL GUARDRAIL DELINEATORS PER STANDARD PLAN A77N4

LEGEND:

SP STEEL POST
MGS (6' SP)
MGS (8' SP)

LAYOUT SITE 9
1" = 20'

L-9

GLENN COUNTY – PUBLIC WORKS AGENCY
HSIP FUNDED GUARDRAIL REPAIR

CONSULTANT FUNCTIONAL SUPERVISOR: Michael Sanchez
CALCULATED–DESIGNED BY: A. Hanson
CHECKED BY
DES CHK
REVISED BY
DATE REVISED

TIME PLOTTED: 6:35:42 PM, Ashley Hanson
DATE PLOTTED: Friday, January 17, 2025
LAST REVISION

| Dist | COUNTY | ROUTE | POST MILES TOTAL PROJECT | SHEET No. | TOTAL SHEETS |
|---|---|---|---|---|---|
| 3 | GLE | FH7 | POST MILE TOTAL PROJECT | 13 | 15 |

Michael A Sanchez 1/17/25
REGISTERED CIVIL ENGINEER DATE

January 17, 2025
PLANS APPROVAL DATE

REGISTERED PROFESSIONAL ENGINEER Michael Sanchez No. 60254 Exp. 06/30/26 CIVIL STATE OF CALIFORNIA

*THE STATE OF CALIFORNIA OR ITS OFFICERS OR AGENTS SHALL NOT BE RESPONSIBLE FOR THE ACCURACY OR COMPLETENESS OF SCANNED COPIES OF THIS PLAN SHEET.*

consor
2868 PROSPECT PARK DRIVE, SUITE 250
RANCHO CORDOVA, CA 95670
P: 916.368.9181

NOTES:

1. PLACE POSTS IN EXISTING POST LOCATIONS.
2. PROTECT EXISTING OVERSIDE DRAINS IN PLACE AND SPACE NEW POSTS AROUND EXISTING DRAINS.
3. MGS TO BE PLACED IN SAME ALIGNMENT AS EXISTING GUARDRAIL REMOVALS.
4. REPLACE POSTS USING BACKFILL OPTION 1 OR 2.
5. IF USING BACKFILL OPTION 1, DRIVE STEEL POSTS AFTER BACKFILLING USING STANDARD METHODS.

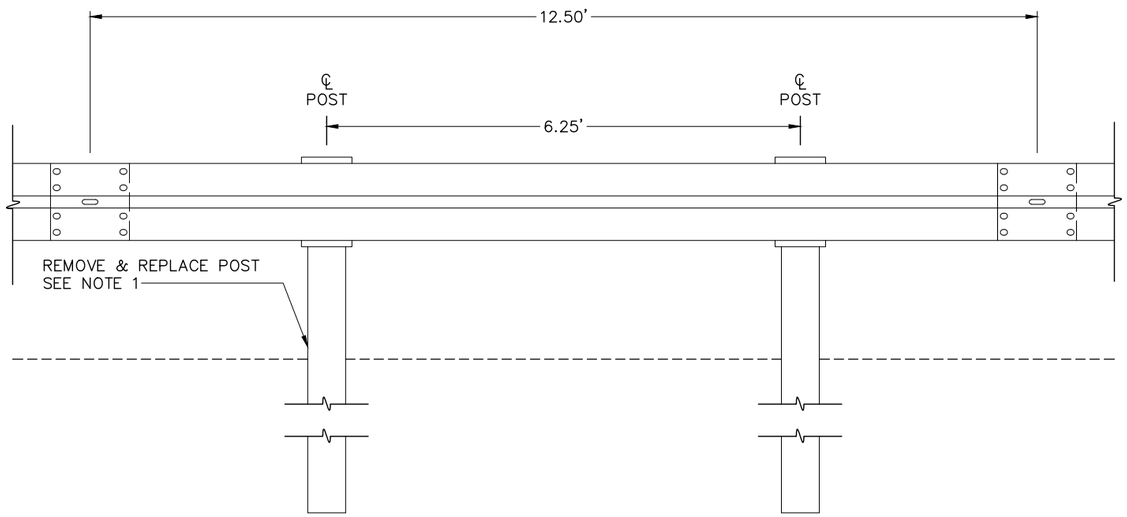


**TYPICAL POST SPACING**
NO SCALE

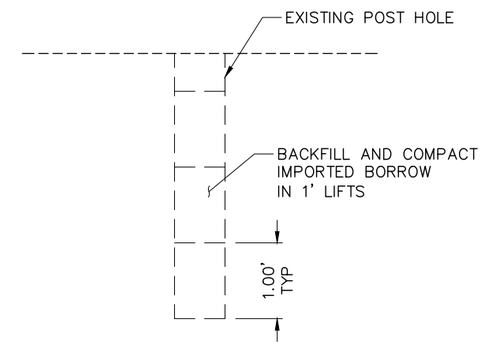


**BACKFILL OPTION 1**
NO SCALE

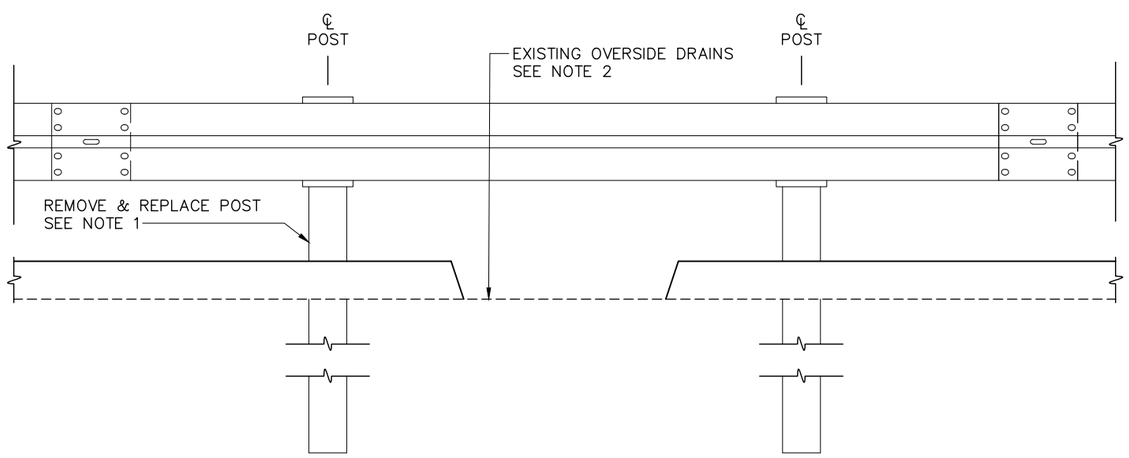


**POST SPACING AT OVERSIDE DRAINS**
NO SCALE

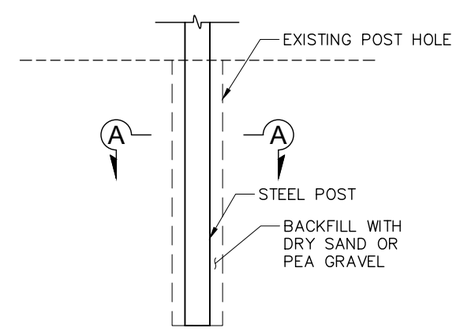


**BACKFILL OPTION 2**
NO SCALE

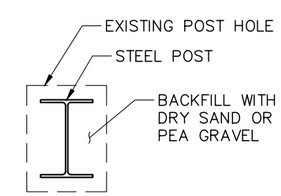


**SECTION A-A**
NO SCALE

# CONSTRUCTION DETAILS
AS SHOWN

C-1

GLENN COUNTY – PUBLIC WORKS AGENCY
HSIP FUNDED GUARDRAIL REPAIR
CONSULTANT FUNCTIONAL SUPERVISOR: Michael Sanchez
CALCULATED–DESIGNED BY: A. Hanson
CHECKED BY: DES CHK
REVISED BY: DATE REVISED

TIME PLOTTED: 6:35:49 PM, Ashley Hanson
DATE PLOTTED: Friday, January 17, 2025
LAST REVISION

| Dist | COUNTY | ROUTE | POST MILES TOTAL PROJECT | SHEET No. | TOTAL SHEETS |
|---|---|---|---|---|---|
| 3 | GLE | FH7 | POST MILE TOTAL PROJECT | 14 | 15 |

Michael A Sanchez 1/17/25
REGISTERED CIVIL ENGINEER DATE

January 17, 2025
PLANS APPROVAL DATE

REGISTERED PROFESSIONAL ENGINEER Michael Sanchez No. 60254 Exp. 06/30/26 CIVIL STATE OF CALIFORNIA

*THE STATE OF CALIFORNIA OR ITS OFFICERS OR AGENTS SHALL NOT BE RESPONSIBLE FOR THE ACCURACY OR COMPLETENESS OF SCANNED COPIES OF THIS PLAN SHEET.*

consor
2868 PROSPECT PARK DRIVE, SUITE 250
RANCHO CORDOVA, CA 95670
P: 916.368.9181

NOTE:

1. THIS PLAN ACCURATE FOR CONSTRUCTION AREA SIGNS ONLY.
2. SIGN LOCATIONS SHOWN ARE APPROXIMATE. EXACT LOCATIONS TO BE DETERMINED BY ENGINEER.
3. SIGN SPACING AND TRAFFIC HANDLING SHALL BE PER THE MOST CURRENT MUTCD AT 55 MPH

LEGEND:

CONSTRUCTION AREA SIGNS

(X) CONSTRUCTION AREA SIGN (CAS) NUMBER

CONSTRUCTION AREA SIGNS

| SIGN NO. | SIGN CODE | PANEL SIZE | SIGN MESSAGE | NO OF SIGNS (EA) | DESCRIPTION |
|---|---|---|---|---|---|
| 1 | C23 (CA) | 36" X 36" | "ROAD WORK AHEAD" | 2 | BLACK ON ORANGE |
| 2 | G20-1 | 18" X 36" | "ROAD WORK NEXT 3 MILES" | 2 | BLACK ON ORANGE |
| 3 | G20-2 | 18" X 36" | "END ROAD WORK" | 2 | BLACK ON ORANGE |
| | | | TOTAL | 6 | |

**DETAIL 1**
NO SCALE

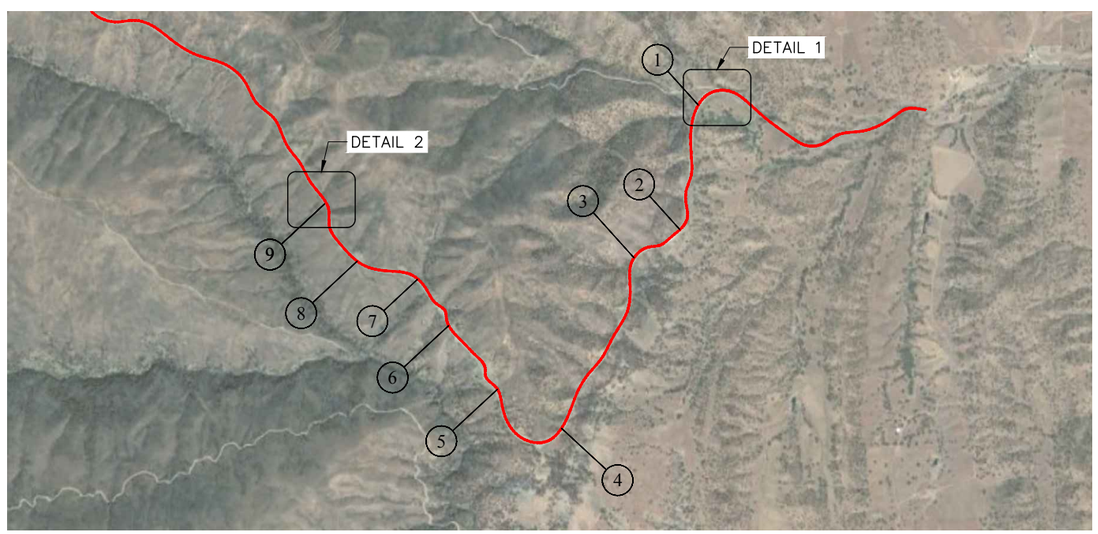


**KEY MAP**
NO SCALE

**DETAIL 2**
NO SCALE

CONSTRUCTION AREA SIGNS
NO SCALE

CS-1

GLENN COUNTY – PUBLIC WORKS AGENCY
HSIP FUNDED GUARDRAIL REPAIR

CONSULTANT FUNCTIONAL SUPERVISOR: Michael Sanchez
CALCULATED–DESIGNED BY: A. Hanson
CHECKED BY
REVISED BY
DATE REVISED

TIME PLOTTED: 6:35:58 PM, Ashley Hanson
DATE PLOTTED: Friday, January 17, 2025
LAST REVISION

| Dist | COUNTY | ROUTE | POST MILES TOTAL PROJECT | SHEET No. | TOTAL SHEETS |
|---|---|---|---|---|---|
| 3 | GLE | FH7 | POST MILE TOTAL PROJECT | 15 | 15 |

Michael A Sanchez 1/17/25
REGISTERED CIVIL ENGINEER DATE

January 17, 2025
PLANS APPROVAL DATE

REGISTERED PROFESSIONAL ENGINEER
Michael Sanchez
No. 60254
Exp. 06/30/26
CIVIL
STATE OF CALIFORNIA

*THE STATE OF CALIFORNIA OR ITS OFFICERS OR AGENTS SHALL NOT BE RESPONSIBLE FOR THE ACCURACY OR COMPLETENESS OF SCANNED COPIES OF THIS PLAN SHEET.*

consor
2868 PROSPECT PARK DRIVE, SUITE 250
RANCHO CORDOVA, CA 95670
P: 916.368.9181

## GUARDRAIL QUANTITIES

| FROM LINE | FROM FROM | TO TO | IN-LINE TERMINAL SYSTEM EA | MIDWEST GUARDRAIL SYSTEM (8' STEEL POST) LF | MIDWEST GUARDRAIL SYSTEM (6' STEEL POST) LF | REMOVE GUARDRAIL LF | GUARD RAILING DELINEATOR EA | COMMENTS |
|---|---|---|---|---|---|---|---|---|
| Site 1 | 00+00 | 03+77 | 2 | 277 | | 377 | 7 | |
| Site 2.1 | 00+00 | 02+34 | | 234 | | 234 | 4 | |
| Site 2.2 | 00+00 | 10+07 | 1 | 957 | | 1007 | 20 | |
| site 2.3 | 00+00 | 02+75 | | 275 | | 275 | 5 | |
| Site 3.1 | 00+00 | 03+52 | 2 | | 252 | 352 | 7 | |
| Site 3.2 | 00+00 | 01+02 | 2 | 2 | | 102 | 3 | |
| Site 4 | 00+00 | 02+10 | 2 | 110 | | 210 | 4 | |
| Site 5 | 00+00 | 18+22 | 1 | 150 | 1622 | 1822 | 36 | |
| Site 6 | 00+00 | 03+95 | | 395 | | 395 | 7 | |
| Site 7 | 00+00 | 01+10 | 2 | | 10 | 110 | 3 | |
| Site 8 | 00+00 | 03+98 | 1 | 348 | | 398 | 7 | |
| Site 9 | 00+00 | 04+68 | | 468 | | 468 | 9 | |
| | | TOTAL | 13 | 3216 | 1884 | 5750 | 112 | |

QUANTITIES
NO SCALE

Q-1

REVISED BY | DATE REVISED
A. Hanson | DES CHK
CALCULATED–DESIGNED BY | CHECKED BY
CONSULTANT FUNCTIONAL SUPERVISOR: Michael Sanchez
GLENN COUNTY – PUBLIC WORKS AGENCY
HSIP FUNDED GUARDRAIL REPAIR

TIME PLOTTED: 6:36:00 PM, Ashley Hanson
DATE PLOTTED: Friday, January 17, 2025
LAST REVISION